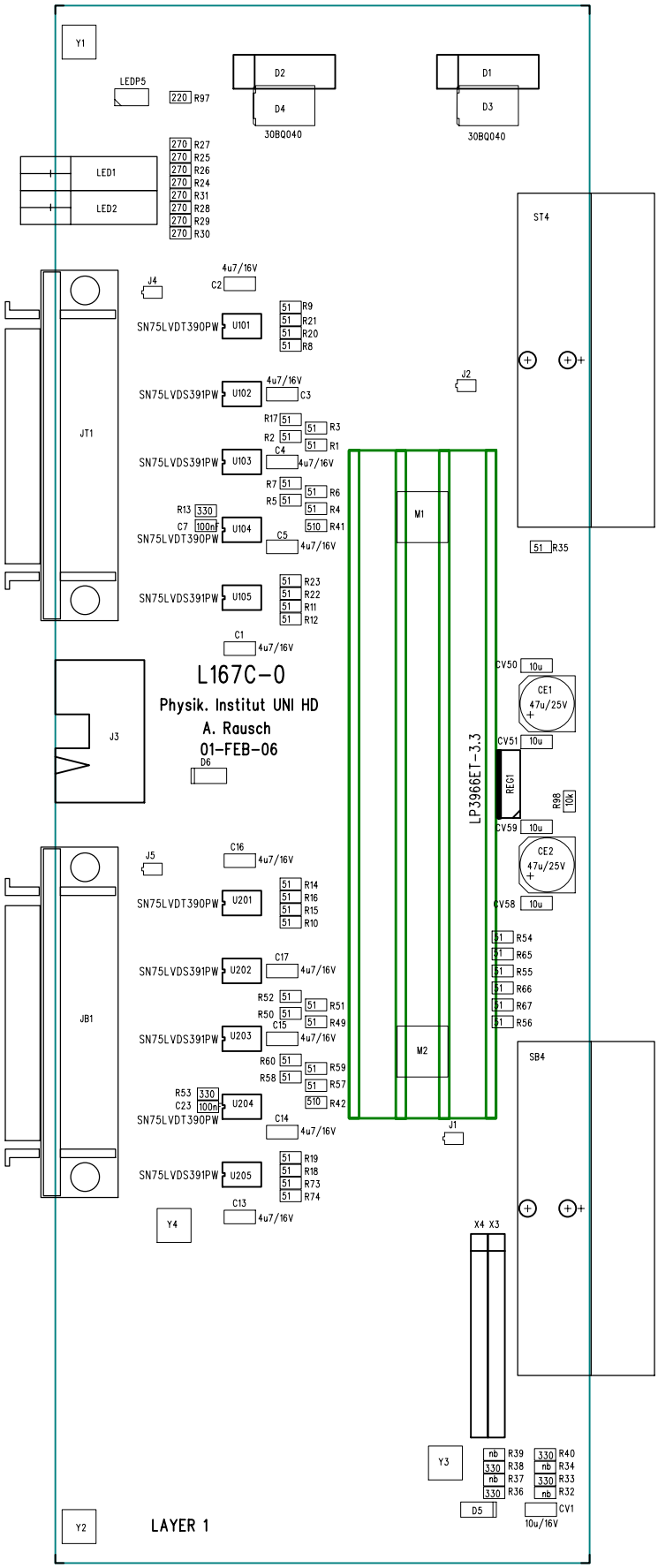

L167C-01.pcb - Wed Aug 09 09:14:55 2006